# THREE-PHASE INDUCTION MOTOR

| OUTPUT | TYPE | FORM | RATING | VOLTAGE(V) | FREQ. (Hz) | SYNC. SPEED($min^{-1}$) | POLES | INS. CLASS | MASS(kg) |
|---|---|---|---|---|---|---|---|---|---|
| 1HP | VTFO | K | S1 | 220/380 | 50 | 3000 | 2 | F | 15.5 |
| 1HP | VTFO | K | S1 | 220/380 | 50 | 1500 | 4 | F | 14.4 |
| 1/2HP | VTFO | K | S1 | 220/380 | 50 | 1000 | 6 | F | 17.5 |

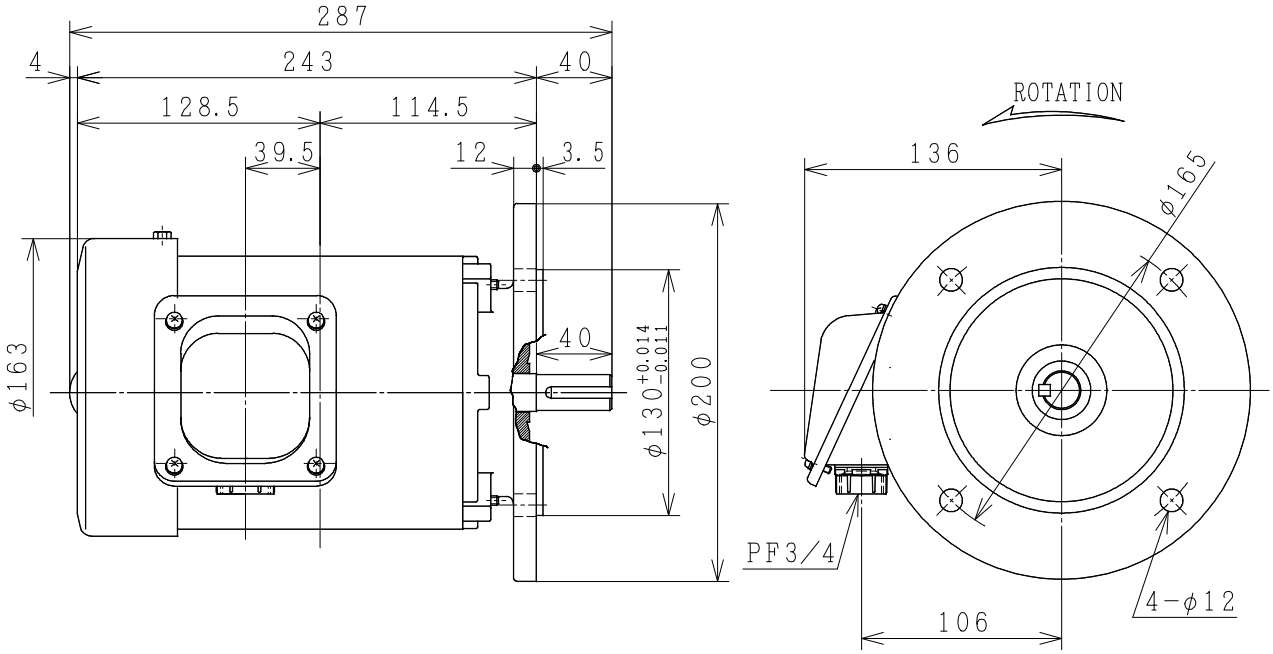


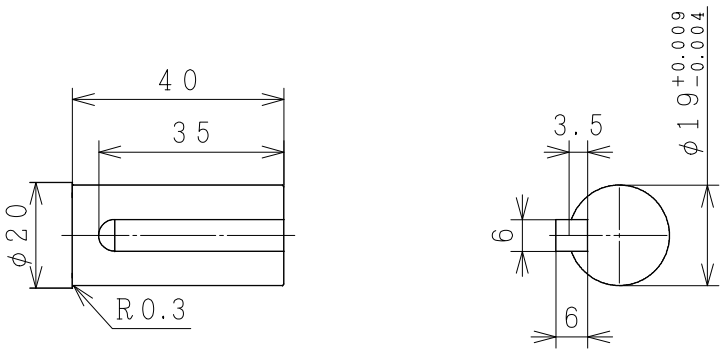


PROTECTION: IP55

PROJECTION

| CUSTOMER | QTY. | ORDER No. | WORK No. | REV. |
|---|---|---|---|---|
| | | | | |

| | | | | | |
|---|---|---|---|---|---|
| DWN. | C. ANAN | 01-JUL-2014 | DIMENSIONS | HITACHI Hitachi Industrial Technology (Thailand),Ltd. | HITT WORKS DWG. No. 4HTD02903 |
| CHKD. | N. WICHARN | | | | SH. |
| APPD. | M. KAMIZONO | | | | |

FRAME SIZE VTFOB-FF165 (80M)