CAPACITOR START CAPACITOR RUN SINGLE PHASE INDUCTION MOTOR

OUTPUT	TYPE	FORM	RATING	VOLTAGE(V)	FREQ. (Hz)	SYNC. SPEED(min^{-1})	POLES	INS. CLASS	MASS(kg)
10HP	EFOUP	KQ	S1	220	50	1500	4	B	

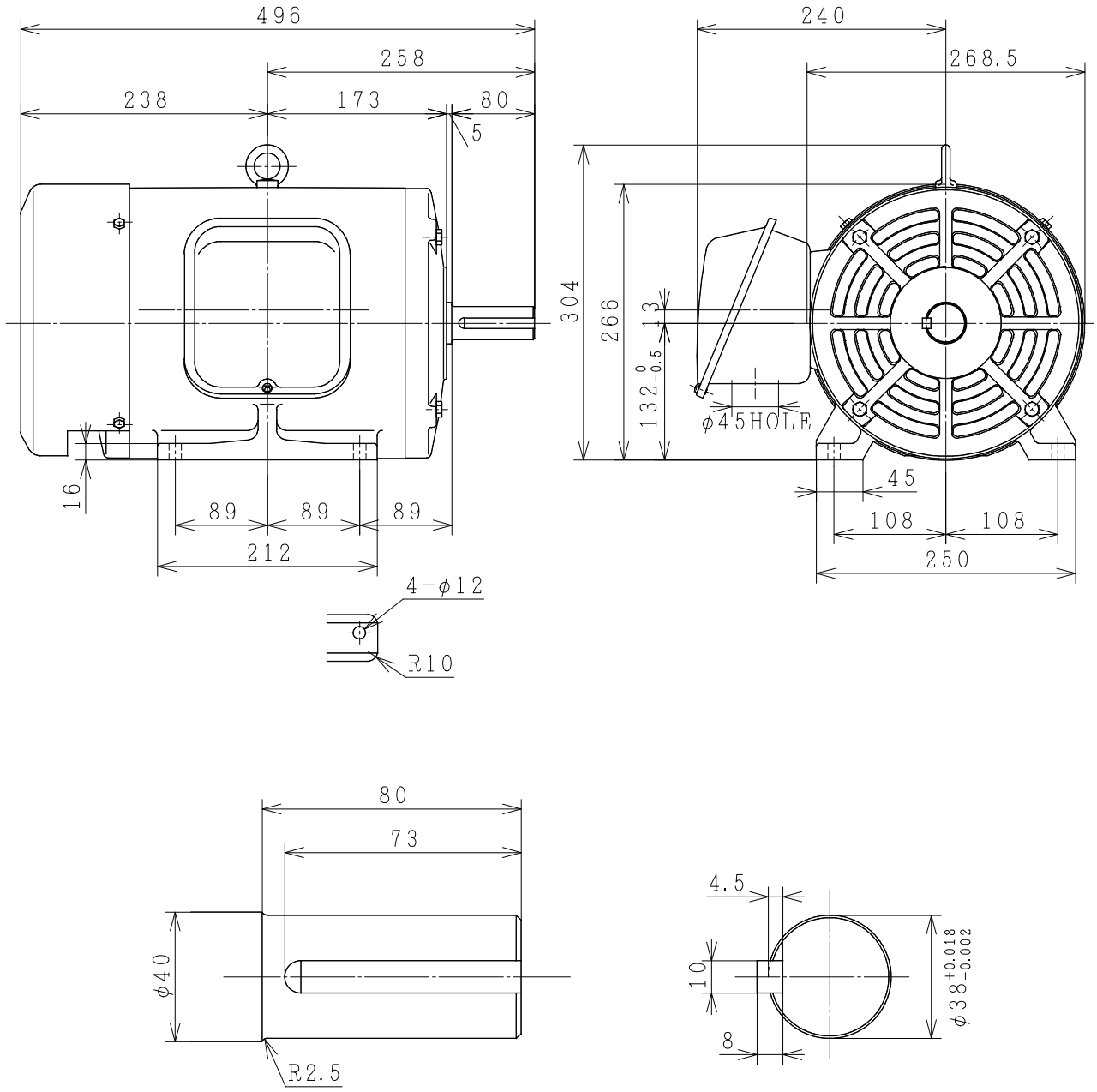

PROJECTION

CUSTOMER	QTY.	ORDER No.	WORK No.	REV.

DWN.	P. Tianchai	08-JUNE-2015	DIMENSIONS	HITACHI Hitachi Industrial Technology (Thailand),Ltd.	HITT WORKS DWG. No. 4HTD03105
CHKD.	W. Thawat				SH.
APPD.	T. Shimozono				
FRAME SIZE		EFOUP-KQ(132)			