4HTN001041

HITACHI AIR CIRCUIT BREAKER

Type		Ampare Frame	Frame size & Phase array	No. of Pole	Rate Current (CT Spec)	Connections
AKS	AKH	4000AF	G FRAME TYPE R S T (N)	4P (G)	4000A	FIXED TYPE V : VERTICAL TYPE (STANDARD)
		5000AF			5000A	

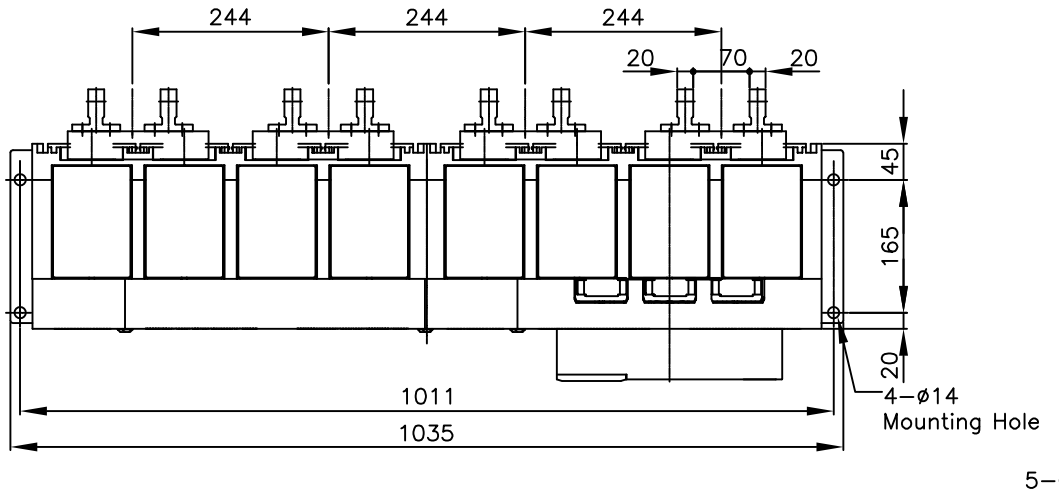

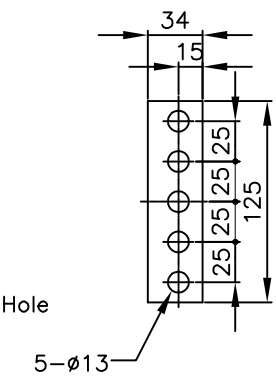

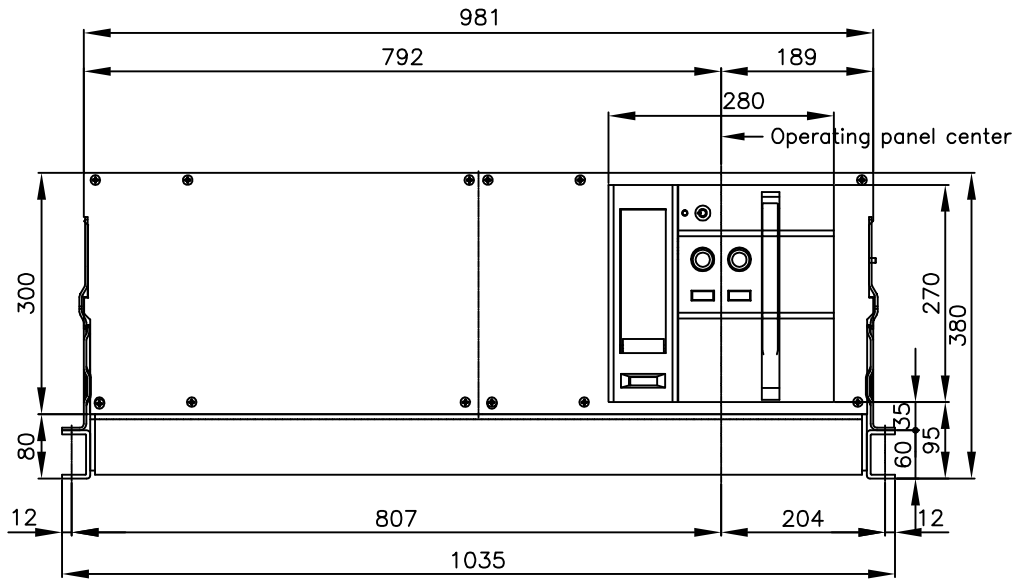

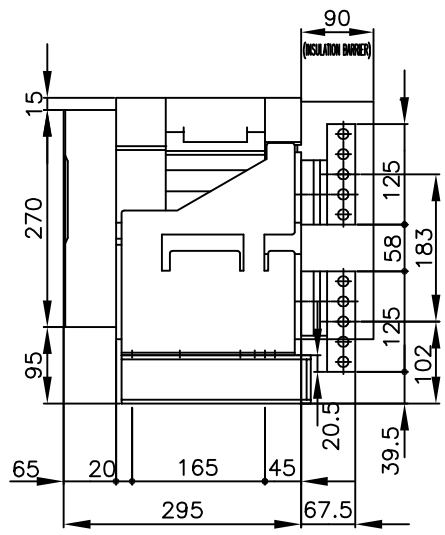

DWN.	W.SIRAPHAT	14/03/17	PROJECTION	TITLE
CHKD.	J. Jomdee C. Krattisak		SCALE NTS.	DIMENSION OF AKS/AKH-40~50-G4
APPD.	T. Sokiguch			

HITACHI

Hitachi Industrial Technology(Thailand),Ltd.

HITT WORKS DWG. No. 4HTN001041

REV. 00

SH. 01

01

*REMARK
-DIMENSION UNIT = Millimeter(mm).