4HTN001257

HITACHI MOLDED CASE CIRCUIT BREAKER

Type	Poles	Rated Insulation Voltage (Ui)	IEC 60947-2 Icu/Ics [kA] 230V	400V	Rated Current	Base Ambient Temparature	Weight
FXK63	2	690 V	25/25	10/10	5 10 15 20 32 40 50 63 A	40 ℃	0.47 kg
	3						0.65 kg

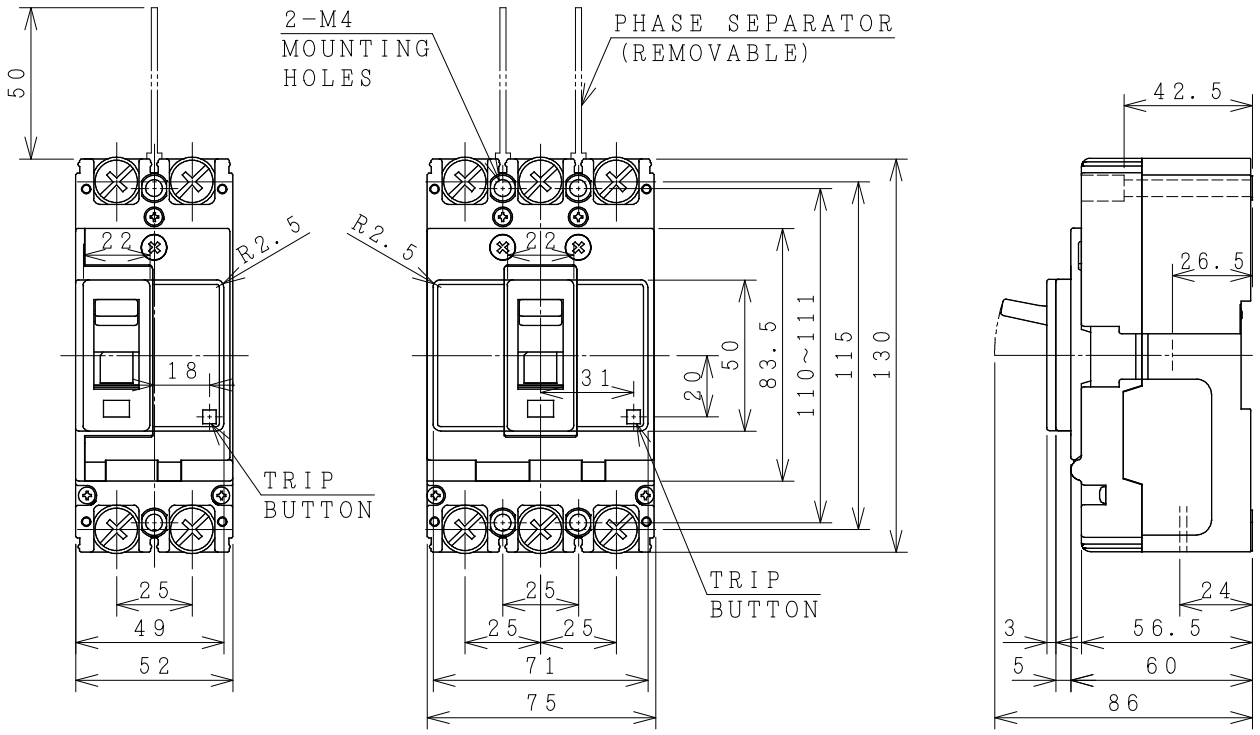

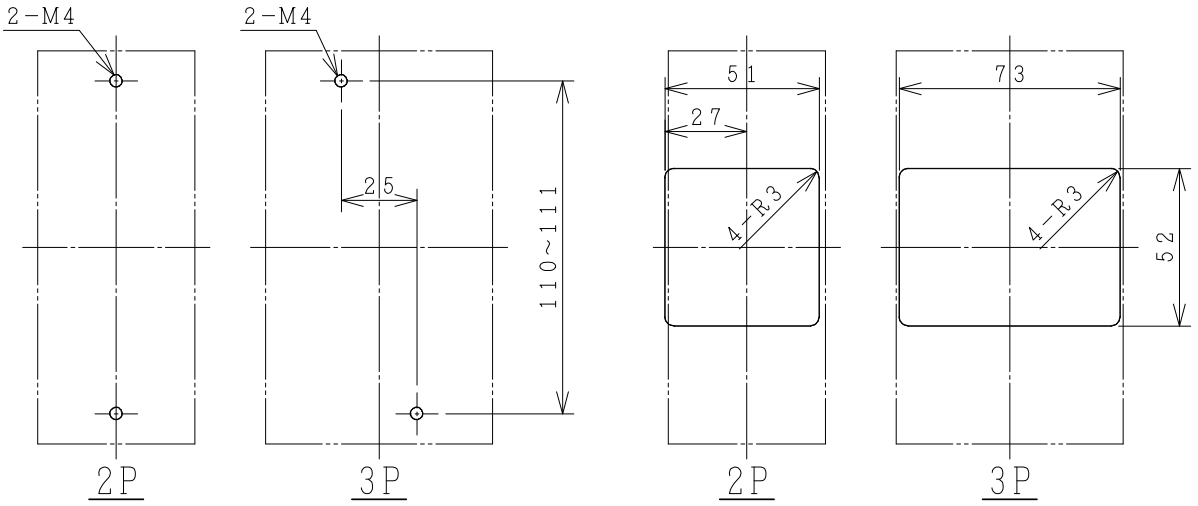

DRILLING PLAN.

ACCESSORIES			
Part	Size	Q'ty 2P	Q'ty 3P
Phase separator	–	2	4
Terminal screw/bolt (50A or less)	M5x14	4	6
Terminal screw/bolt (60A or more)	M8x14	4	6
Mounting screw	M4x55	2	2
Assistant handle	–	–	–

Interior accessories	AL, AUX, SHT

※REMARK
-DIMENSION UNIT = Millimeter (mm).
-REFERENCE DWG NO. 33059405.

FRONT PLATE CUTOUT.
THESE DIMENSIONS THE HEIGHT OF FRONT PLATE FROM BASE OF CASE TO COVER IS 68mm.
-CLEARANCE 1mm ON EACH SIDE OF HANDLE.

DWN.	O.SITTICHAI	11/06/20	PROJECTION	TITLE
CHKD.	Ch. Chantaya / M Sarikat			DIMENSION OF FXK63
APPD.	S. Sugai		SCALE NTS.	

HITACHI
Hitachi Industrial Technology (Thailand), Ltd.

HITT WORKS DWG. No. 4HTN001257

REV. 00
SH. 01
01