4HTN001260

HITACHI MOLDED CASE CIRCUIT BREAKER

Type	Poles	Rated Insulation Voltage (Ui)	IEC 60947-2 Icu/Ics [kA] 230V	400V	Rated Current	Base Ambient Temparature	Weight
F-100GB	4	690 V	100/100	75/75	15 20 30 40 50 60 75 100 A	40 ℃	2.3 kg

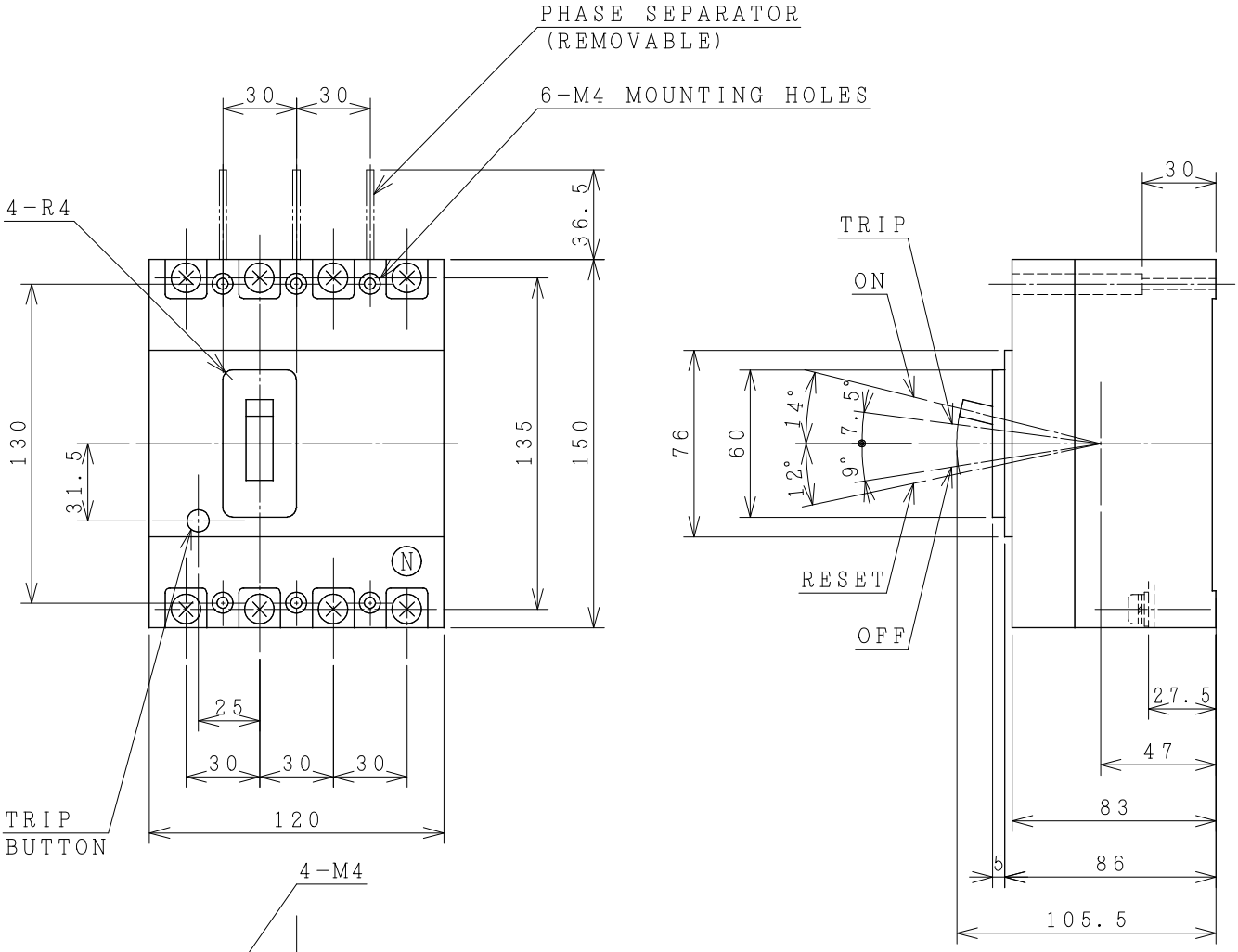

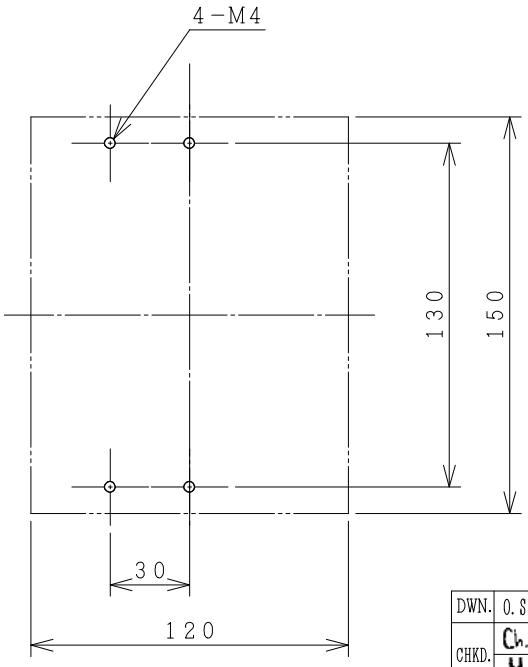

DRILLING PLAN.

ACCESSORIES			
Part	Size 15~50 A	Size 60~100 A	Q'ty
Phase separator	–	–	6
Terminal screw/bolt	M6x14	M8x14	8
Mounting screw	M4x40	M4x40	4
Assistant handle	–	–	–

Interior accessories	AL, AUX, SHT

※REMARK
-DIMENSION UNIT = Millimeter (mm).
-Reference DWG NO. 33059407.

DWN.	O. SITTICHAI	24/06/20	PROJECTION	TITLE
CHKD.	Ch. Chantichya / M Sorakat		SCALE NTS.	DIMENSION OF F-100GB
APPD.	S. Sugai			

HITACHI
Hitachi Industrial Technology (Thailand), Ltd.

HITT WORKS DWG. No. 4HTN001260

REV. 00 SH. 01 01