4HTN000797

HITACHI ELECTROMAGNETIC SWITCH

Type	Rated insulation voltage (Ui)	Max. rated capacity of motor			Rated thermal current (AC1 = Ith)	Applicable standard	Aux. Contact	Weight
HS20-T	AC 690 V	240V	5.5kW	22A	32 A	IEC 60947-4-1	1a1b or 2a2b	0.57 kg
HS20-TK		440V	11kW	22A				

※WITH AUX. CONTACT SIDE ON UNIT = 88mm.

※WITH AUX. CONTACT HEAD ON UNIT = 112mm.

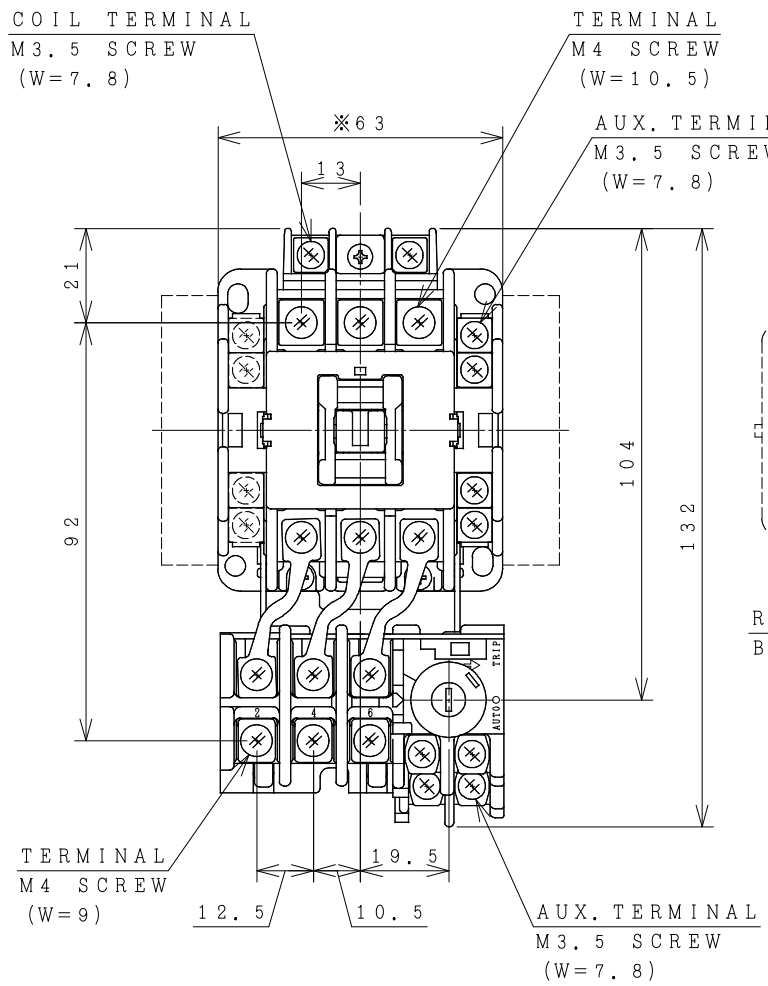

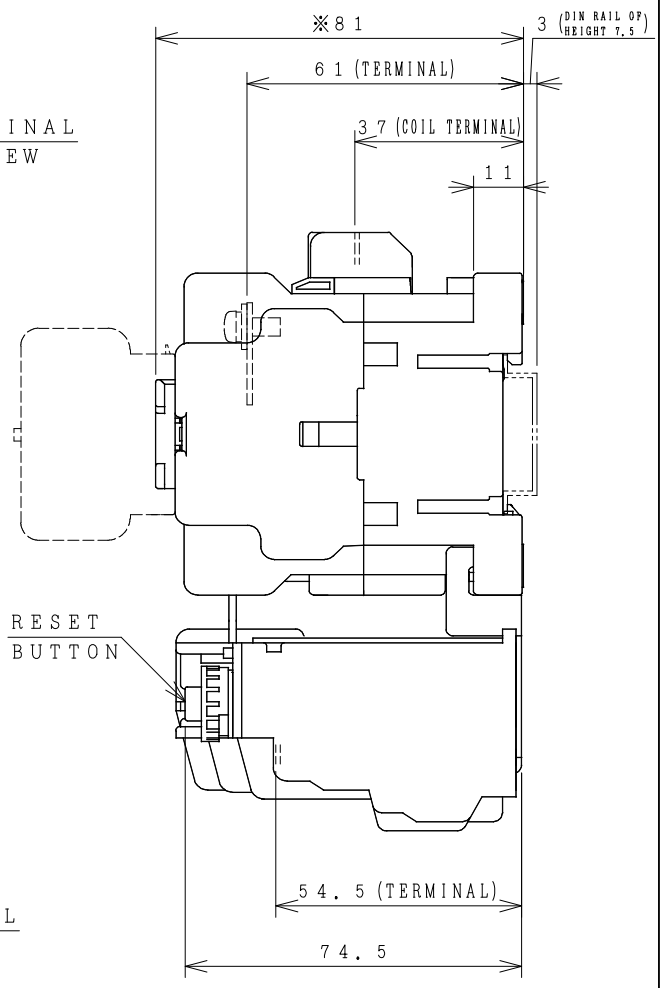

OUTLINE DIMENSIONS.

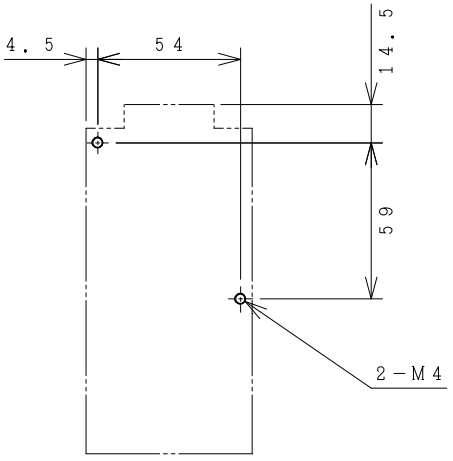

MOUNTING HOLES.

54x56
54x60
ALSO POSSIBLE.
(W=) : WIDTH OF TERMINAL.

※IN CASE OF 2E THERMAL OVERLOAD RELAY.

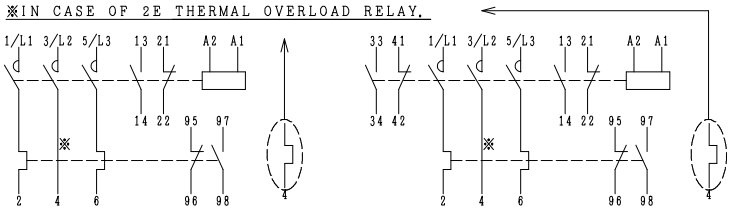

AUX. CONTACTS : 1a1b 2a2b

CONTACTS ARRANGEMENT.
(Reference 43067247R04).

※REMARK
- DIMENSION UNIT = Millimeter (mm).
- (a) = AUX. CONTACT NORMALLY OPENED.
- (b) = AUX. CONTACT NORMALLY CLOSED.

DWN.	O. SITTICHAI	04/07/16	PROJECTION	TITLE
CHKD.	C. Kiattisak			DIMENSION OF HS20-T, TK
APPD.			SCALE NTS.	
HITACHI Hitachi Industrial Technology (Thailand), Ltd.			HITT WORKS DWG. No. 4HTN000797	REV. 00 / SH. 01 / 01